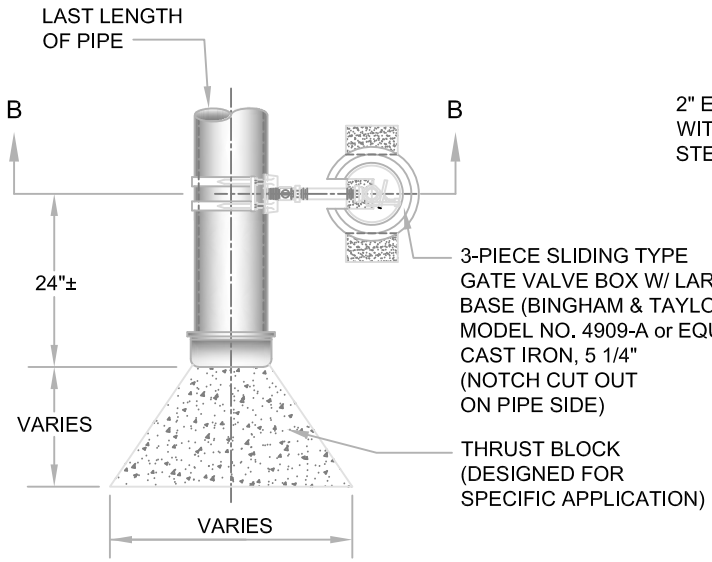

PLAN

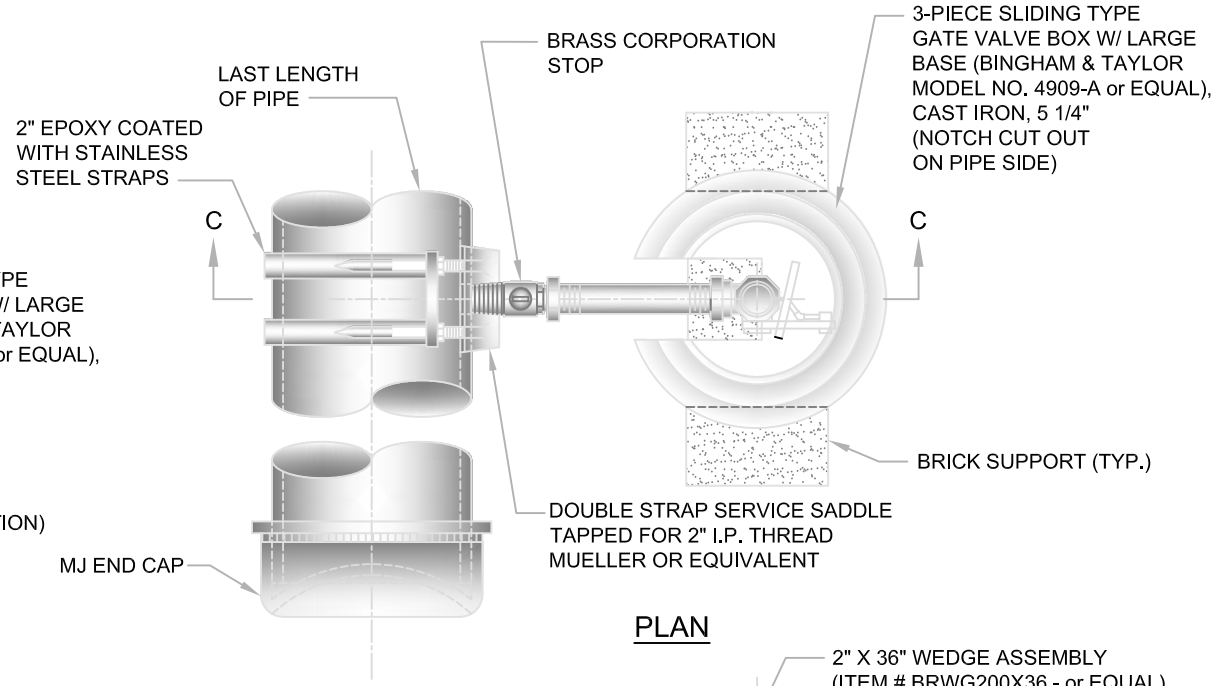

PLAN

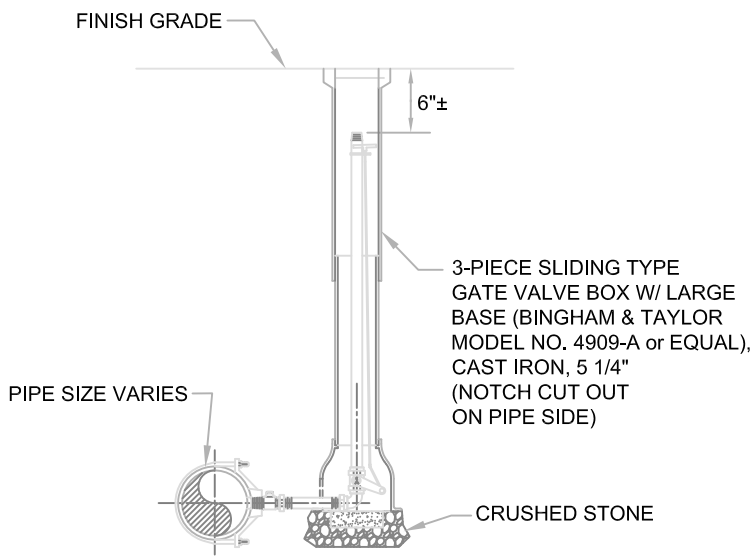

SECTION B-B

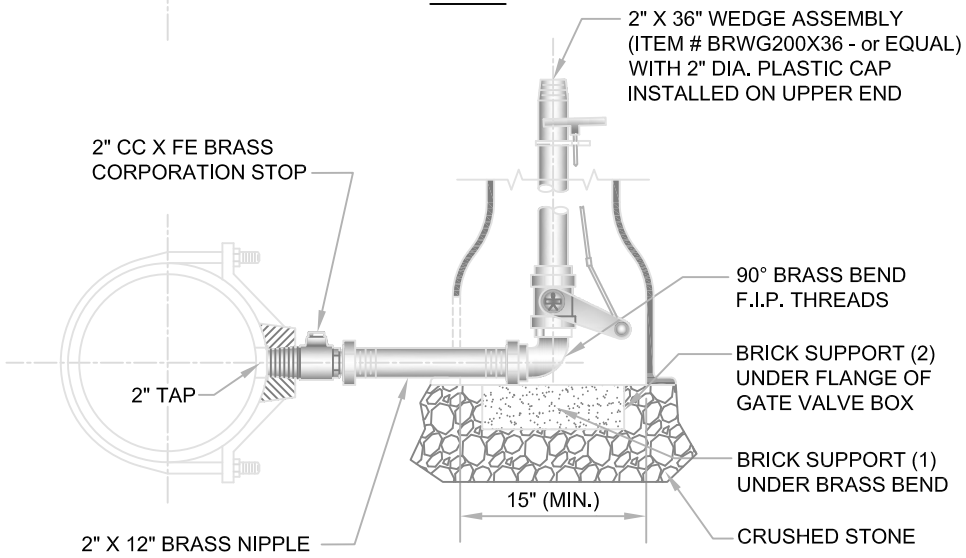

SECTION C-C

TYPICAL
NEW 2-INCH WEDGE BLOWOFF ASSEMBLY
(ON EXISTING MAIN)

NOT TO SCALE

Senior Manager of Engineering — Date 2/6/13

PROVIDENCE WATER